existence of novel sponge sterols that do not interact with demospongic phospholipids strongly implicates some other membrane molecules participating in lipid interaction, the most likely candidates being the membrane proteins.[12,13,83,84]

We recently identified[85] a number of conventional (mainly $C_{16}$–$C_{18}$) fatty acids covalently linked to intrinsic proteins of marine sponge membranes. Is it probable that these lipoproteins are interacting with the sterols or demospongic acids? In view of the relatively rare occurrence of acylated membrane proteins and their obscure biological roles,[12,86] new insights into these molecules may well be gained from further studies with sponge proteins.

(85) Ayanoglu, E.; Rizzolio, M.; Beaulieu, S.; Roberts, J.; Oz, O.; Djerassi, C. *Comp. Biochem. Physiol.* **1990**, *96B*, 597–603.
(86) Wilcox, C. A.; Olson, E. N. *Biochemistry* **1987**, *26*, 1029–1036 and literature cited therein.

## Concluding Remarks

The sponge cell membrane is unique in terms of its lipid diversity and lack of interaction of its phospholipids with sterols. The biological significance of these characteristics is unknown. They may be the result of neutral mutations[9] or perhaps represent molecular fossils. In any event, the sponge membrane allows a sponge to adapt to the precarious aquatic environment, with its fluctuating temperature, oxygen content, and osmolarity. Further investigation of the components of this distinct membrane will deepen our understanding of cell membrane function in general.

*We gratefully acknowledge the participation of the Cancer Research Institute and Department of Pharmaceutical Chemistry, University of California, San Francisco, in the model membrane studies. Financial support at Stanford was provided by National Science Foundation Grant DMB 86-06249 and by National Institutes of Health Grants GM 06840 and AM 04257.*

# Controlling Electrochemical Catalysis with Surfactant Microstructures

JAMES F. RUSLING

*Department of Chemistry (U-60), University of Connecticut, Storrs, Connecticut 06269-3060*

*Received July 12, 1990 (Revised Manuscript Received January 3, 1991)*

Surfactants are amphiphilic ions or molecules with charged or polar head groups and long hydrocarbon tails. Two of their properties are useful in electrochemistry: adsorption at interfaces and aggregation into supramolecular structures. In the early part of this century, adsorption of surface-active compounds on Hg electrodes was found to suppress unwanted convection.[1] Surfactants became widely used for this purpose. Micelles (Figure 1) are examples of surfactant aggregates. They are formed from soluble surfactants above a critical micelle concentration (CMC). Solutes can bind at the micelle–water interface (Stern layer) and in hydrophobic regions just below this interface.[2] In 1952, Proske was the first to use micelles to solubilize nonpolar organic compounds in water for electrochemical measurements.[3]

The past 10–15 years saw many new applications of surfactants in electrochemistry. For example, ion radicals produced at electrodes were stabilized by coulombic and hydrophobic interactions with micelles.[3] Reducible and oxidizable probes began to be used to measure diffusion in surfactant media.[4,5] Microstructures of amphiphiles adsorbed on electrodes were investigated.[6] Coatings of functional amphiphiles were prepared on electrodes by Langmuir–Blodgett (LB) methods.[7]

**Scheme I**

$$P + e \rightleftharpoons Q \qquad E^\circ \text{ (at electrode)} \qquad (1)$$

$$ArX + Q \underset{k_2}{\overset{k_1}{\rightleftharpoons}} ArX^{\bullet -} + P \qquad (2)$$

$$ArX^{\bullet -} \xrightarrow{k} Ar^\bullet + X^- \qquad (3)$$

$$Ar^\bullet + Q \longrightarrow P + Ar^- \qquad \text{(fast)} \qquad (4)$$

$$Ar^- + (H^+) \longrightarrow ArH \qquad \text{(fast)} \qquad (5)$$

James F. Rusling was born in Philadelphia, PA, in 1946. He received his B.S. in Chemistry from Drexel University in 1969. After several years as an analytical chemist at Sadtler Research Labs and Wyeth Pharmaceutical Co., he earned his Ph.D. from Clarkson University in 1979. He joined the chemistry faculty at the University of Connecticut in 1979, where he is now Professor of Analytical Chemistry. In 1986 he was Visiting Professor at the University of Southampton, England. His research interests include electrochemistry in organized media, bioelectrochemistry, electrochemical solutions to environmental problems, computer modeling of chemical data, photoelectrocatalysis, and surface spectroelectrochemistry.

(1) Heyrovsky, J.; Kuta, J. *Principles of Polarography*; Academic: New York, 1966.
(2) Fendler, J. H. *Membrane Mimetic Chemistry*; Wiley: New York, 1982.
(3) Proske, G. E. O. *Anal. Chem.* **1952**, *24*, 1834–1837.
(4) McIntyre, G. *Crit. Rev. Anal. Chem.* **1990**, *21*, 257–278.
(5) (a) Shinozuka, N.; Hayano, S. In *Solution Chemistry of Surfactants*; Mitall, K. L., Ed.; Plenum: New York, 1979; Vol. 2, pp 599–623. (b) Mackay, R. A.; Dixit, N. S.; Agerwal, R.; Seiders, R. P. *J. Dispersion Sci. Technol.* **1983**, *4*, 397–407 and references therein.
(6) (a) Mousty, C.; Pouillen, P.; Marte, A.-M.; Mousset, G. *J. Colloid Interface Sci.* **1986**, *113*, 521–529. (b) Van Galen, D. A.; Majda, M. *Anal. Chem.* **1988**, *60*, 1549–1553. (c) Facci, J. S. *Langmuir* **1987**, *3*, 525–530. (d) Diaz, A.; Kaifer, A. E. *J. Electroanal. Chem.* **1988**, *249*, 333–338. (e) Donohue, J. J.; Buttry, D. A. *Langmuir* **1989**, *5*, 671–678. (f) Widrig, C. A.; Majda, M. *Langmuir* **1989**, *5*, 689–695. (g) Bunding Lee, K. A.; Mowry, R.; McLennan, G.; Finklea, H. O. *J. Electroanal. Chem.* **1988**, *246*, 217–224. (h) Bunding Lee, K. A. *Langmuir* **1990**, *6*, 709–712. (i) Creager, S. E.; Collard, D. M.; Fox, M. A. *Langmuir* **1990**, *6*, 1617–1620.

0001-4842/91/0124-0075$02.50/0 © 1991 American Chemical Society

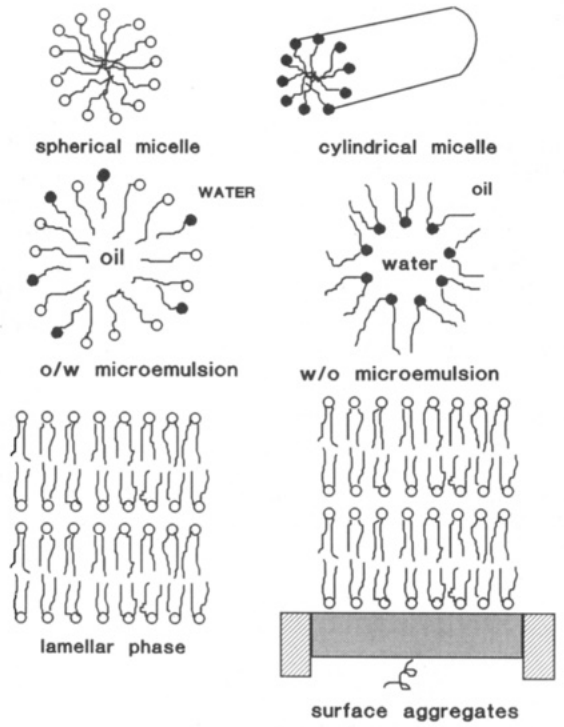


**Figure 1.** Conceptual pictures of some surfactant aggregates useful in controlling electrochemical catalysis. Circles are head groups; wiggly lines are hydrocarbon tails.

Over the same period, surfactant aggregates were used to separate charged products and retard back reactions in sensitized photolytic generation of hydrogen from water.[2,8] There is close correspondence between photosensitized reduction of water and electrochemical catalytic reductions. The latter use mediators to shuttle electrons between electrodes and electron acceptors. Both methods feature electron transfer (ET) from an activated donor to an acceptor. Both convert energy to chemical products. Photolysis uses light as the energy source to activate the donor; electrochemistry uses electricity.

This correspondence is illustrated by Scheme I, the pathway for electrochemically catalyzed reduction of aryl halides (ArX),[9,10] a reaction we have studied in surfactant media. Mediator (catalyst) P is added to solution or immobilized on the electrode. P is reduced to its activated form Q at the electrode (eq 1). Q transfers an electron to acceptor ArX (eq 2). The photochemical analogue of Q is a photoexcited sensitizer that transfers an electron to an appropriate acceptor.

Equation 2 is the rate-determining step (rds) in many aryl halide reductions, but cleavage of $ArX^{\bullet-}$ in eq 3 is also important.[9,10b] A second ET and protonation (eqs 4 and 5) yield ArH.[10c] The significance of back electron transfer in eq 2 is minimized by fast decomposition of radical anion $ArX^{\bullet-}$ in eq 3, which drives the equilibrium in eq 2 to the right. The resulting advantage is that ArX is reduced to ArH at the lower standard potential ($E°$) of the catalyst, rather than the more negative potential for direct reduction of ArX at the electrode. P is regenerated in the catalytic cycle and gets reduced again at the electrode. The measured "catalytic" current for reduction of P (eq 1) is larger when ArX is present, and this can be used to estimate $k_1$.

We felt that principles used to control light-driven ET in surfactant media could be harnessed for electrochemical catalysis. Manipulating surface properties of electrodes would provide a second handle for control. We began to apply surfactant solutions[11] to electrochemical catalysis in 1984. *A guiding aim was to enhance rates of second-order ETs (eq 2) by creating large local concentrations of catalyst and substrate in surfactant aggregates.*

Because of our concurrent interest in decomposing environmental pollutants, dehalogenations of aryl and alkyl halides were used as model reactions in surfactant media. Aryl halides include toxic polychlorinated biphenyls (PCBs) and chlorodioxins; many pesticides are polyhaloalkanes. The more insoluble of these are often found in aquatic sediments.[12] These nonpolar compounds bind to surfactant aggregates and thus are excellent substrates for attempting rate enhancements. Electrochemical catalytic dehalogenation is an attractive alternative to widely used sodium naphthalide[13a,b] or borohydride assisted photolytic[13c] reductions. Electrochemical catalysis in surfactant media does not require excess chemical reagents, is tolerant of water and particles found with the pollutants, and can capitalize on modern advances in electrochemical engineering.[14]

This Account reviews research in electrochemical catalysis using surfactant solutions. First, general properties of useful surfactant microstructures are reviewed briefly. Second, our studies of electrochemical catalysis in micelles, microemulsions, and a surfactant dispersion are discussed. Finally, some approaches to designing catalytically useful surfactant microstructures on electrodes are outlined.

## Surfactant Aggregates

Just above the CMC, micelles are mainly globular (Figure 1) with diameters of 2–5 nm. At higher concentrations (>0.1 M), or at ≥0.1 M salt, rod-like micelles

(7) (a) Daikufu, H.; Aoki, K.; Tokuda, K.; Matsuda, H. *J. Electroanal. Chem.* **1985**, *183*, 1. (b) Daikufu, H.; Yoshimura, I.; Hirata, I.; Aoki, K.; Tokuda, K.; Matsuda, H. *J. Electroanal. Chem.* **1986**, *199*, 47–68. (c) Facci, J. S.; Falcigno, P. A.; Gold, J. M. *Langmuir* **1986**, *2*, 732–738. (d) Zhang, X.; Bard, A. J. *J. Am. Chem. Soc.* **1989**, *111*, 8098–8105. (e) Fujihira, M.; Pootsittisak, S. *J. Electroanal. Chem.* **1986**, *199*, 481–484. (f) Fujihira, M.; Pootsittisak, S. *Chem. Lett.* **1986**, 251–252. (g) Nishiyama, K.; Fujihira, M. *Chem. Lett.* **1987**, 1443–1446. (h) Fujihira, M.; Aoki, K.; Inoue, S.; Takemura, H.; Muraki, H.; Aoyagui, S. *Thin Solid Films* **1985**, *132*, 221–228. (i) Zhang, X.; Bard, A. J. *J. Phys. Chem.* **1988**, *92*, 5566–5569. (j) Okahata, Y.; Tsuruta, T.; Ijiro, K.; Ariga, K. *Langmuir* **1988**, *4*, 1373–1375. (k) Zaba, B. N.; Wilkinson, M. C.; Taylor, D. M.; Lewis, T. J.; Laidman, D. L. *FEBS Lett.* **1987**, *213*, 49–54. (l) Yokota, T.; Itoh, K.; Fujishima, A. *J. Electroanal. Chem.* **1987**, *216*, 289–292.

(8) Gratzel, M. *Heterogeneous Photochemical Electron Transfer*; CRC Press: Boca Raton, FL, 1989.

(9) Andrieux, C. P.; Blocman, C.; Dumas-Bouchiat, J.-M.; Saveant, J. M. *J. Am. Chem. Soc.* **1979**, *101*, 3431–3441.

(10) (a) Connors, T. F.; Rusling, J. F.; Owlia, A. *Anal. Chem.* **1985**, *57*, 170–174. (b) Arena, J. V.; Rusling, J. F. *J. Phys. Chem.* **1987**, *91*, 3368–3373. (c) Other reactions following eq 3, e.g., H atom abstraction by $Ar^{\bullet}$, can also be involved in reduction of aryl halides. See: Andrieux, C. P.; Saveant, J. M.; Zann, D. *Nouv. J. Chim.* **1984**, *8*, 107–116.

(11) (a) Kuwana et al.[11b] first employed micelles in electrochemical catalysis to solubilize mediators for redox titrations of proteins. (b) Fujihira, Y.; Kuwana, T.; Hartzell, C. R. *Biochem. Biophys. Res. Commun.* **1974**, *61*, 488–493.

(12) D'Itri, F. M., Kamrin, M. A., Eds. *PCB's: Human Environmental Hazards*; Butterworths: Woburn, MA, 1983.

(13) (a) Exner, J. E., Ed. *Detoxification of Hazardous Waste*; Ann Arbor Science: Ann Arbor, MI, 1982. (b) Oku, A.; Yasufku, K.; Kataoka, H. *Chem. Ind. (London)* **1978**, *21*, 841. (c) Epling, G. A.; McVicar, W.; Kumar, A. *Chemosphere* **1987**, *16*, 1013 and references therein.

(14) (a) Jansson, R. *Chem. Eng. News, Special Report* **1984**, *Nov. 18*, 43–57. (b) Danly, D. D. In *Organic Electrochemistry*, 2nd ed.; Baizer, M., Lund, H., Eds.; Marcel Dekker: New York, 1983; pp 956–999.

**Table I**
**Observed Rate Constants for ET between Reduced Catalysts and Substrates[a]**

| catalyst[b] | $E^{\circ\prime}$,[c] V/SCE | surfactant system | | | homogeneous | |
|---|---|---|---|---|---|---|
| | | substrate | system | $k_{1,app}$, $M^{-1}$ $s^{-1}$ | solvent | $k_1$, $M^{-1}$ $s^{-1}$ |
| 9-PA | −2.15 | 4-BB | 0.1 M CTAB | $10^7$ | DMF | 300 |
| 1,2-DCB | −1.55 | TCB | 0.1 M CTAB | $3 \times 10^3$ | DMF | 115 |
| $Co(bpy)_3^{2+}$ | −1.1 | $CH_2CHCH_2Cl$ | 0.1 M CTAB | 220 | MeCN | 100 |
| $Co(bpy)_3^{2+}$ | −1.2 | $CH_2CHCH_2Cl$ | 0.1 M SDS | 90 | | |
| $Co(bpyC16)_3^{2+}$ | −1.6 | $CH_2CHCH_2Cl$ | 0.1 M SDS | 300 | | |
| $B_{12}Co(II)$ | −0.87 | DBB | {0.2 M AOT/ | $0.3 \times 10^3$ | $MeCN/H_2O$ | $1.3 \times 10^6$ |
| | | EDB | 4 M $H_2O$/ | $1.3 \times 10^3$ | (pH 2.3) | $2.6 \times 10^6$ |
| | | *t*-DCB | isooctane}[d] | $6.2 \times 10^3$ | | $5.1 \times 10^6$ |

[a] Data from refs 17 and 20–22. [b] Abbreviations: 1,2-DCB, 1,2-dicyanobenzene; bpyC16, 4,4′-dihexadecyl-2,2′-bipyridyl; TCB, 2,2′,5,5′-tetrachlorobiphenyl; 4-BB, 4-bromobiphenyl; DBB, 1,2-dibromobutane; EDB, 1,2-dibromoethane; *t*-DCB, *trans*-dibromocyclohexane. [c] In surfactant medium used. [d] W/o microemulsion; water pools at pH 3 with 17 mM phosphate.

often appear. Sodium dodecylsulfate (SDS) and hexadecyltrimethylammonium bromide (cetyltrimethylammonium bromide, CTAB) are typical ionic micelle-forming surfactants. Surfactants with two long chains, like didodecyldimethylammonium bromide (DDAB), are usually insoluble in water. They do not form micelles, but disperse in lamellar phases (Figure 1) in water.

Thermodynamically stable, optically clear mixtures of surfactant, water, and oil are called microemulsions.[2,15] They may contain alcohols to achieve stability. Oil-in-water (o/w) microemulsions have a continuous water "phase", with surfactant surrounding the oil in globular aggregates resembling swollen micelles (Figure 1). Conversely, water-in-oil (w/o) microemulsions have a continuous oil phase, with surfactant surrounding the water in microdroplets. Like micelles, aggregates in microemulsions are in dynamic equilibrium with their components in the continuous phase.[2] Bicontinuous microemulsions are continuous in oil *and* water with surfactant aligned at dynamic extended networks of interconnecting, oil–water interfaces.[15] Microemulsions often solubilize larger amounts of solutes than micelles.

Electrodes used in micellar solutions or microemulsions will nearly always be coated with adsorbed surfactant. Increasing evidence suggests that ionic surfactants adsorb as bilayers, "hemimicelles", or multilayers at water–electrode interfaces.[6f,16,17] Thermodynamically stable structures (Figure 1) should have charged head groups facing the water. As we shall see, multilayers of surfactant on electrodes can profoundly influence rates of second-order catalytic reactions.[17,18]

## Kinetics of Electrocatalysis in Micellar Solutions

Catalytic reductions of aryl halides (Scheme I) were studied in several micellar systems to see if increases in rates could be realized. Significant rate enhancements would require mediators and substrates to be almost entirely bound to micellar structures. One of the first mediators studied was 9-phenylanthracene (9-PA) in aqueous CTAB. Reduction of 9-PA at Hg

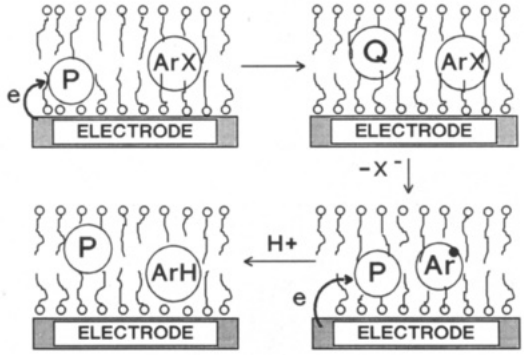


**Figure 2.** Conceptual representation of electrochemical catalytic reduction of an aryl halide (ArX) with mediator P in a surfactant film on an electrode. (These films consist of many layers of cationic surfactant molecules when potential is more negative than −2 V vs SCE.)

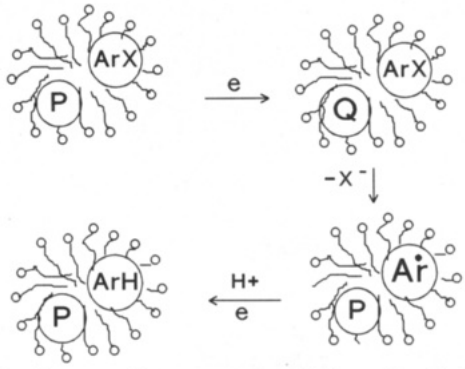


**Figure 3.** Conceptual representation of electrochemical catalytic reduction of an aryl halide (ArX) with mediator P in micelles in solution. The source of electrons is an electrode.

electrodes at −2.2 V vs SCE gave anion radicals (cf. eq 1) that were stable for several seconds in a multilayer film of CTAB adsorbed on the electrode.[17] Anion radicals of 9-PA were less stable in nonionic surfactants and unstable in anionic SDS micelles. The positive charge of CTAB helps stabilize 9-PA anion radical in the film on the electrode.

An apparent rate constant $k_1$ (eq 2) of $10^7$ $M^{-1}$ $s^{-1}$ was found[17,19] by cyclic voltammetry for reaction of 9-PA

(15) (a) Evans, D. F.; Mitchell, D. J.; Ninham, B. W. *J. Phys. Chem.* **1986**, *90*, 2817–2825. (b) Shinoda, K.; Lindman, B. *Langmuir* **1987**, *3*, 135–149. (c) Langevin, D. *Acc. Chem. Res.* **1988**, *21*, 255–260.

(16) Besio, G. J.; Prud'homme, R. K.; Benziger, J. B. *Langmuir* **1988**, *4*, 140–144.

(17) Rusling, J. F.; Shi, C.-N.; Gosser, D. K.; Shukla, S. S. *J. Electroanal. Chem.* **1988**, *240*, 201–216.

(18) Iwunze, M. O.; Rusling, J. F. *J. Electroanal. Chem.* **1989**, *266*, 197–201.

(19) Rate constants in micelles and microemulsions are expressed as apparent values estimated on the basis of bulk concentrations. In general, reactant concentrations at the microheterogeneous reaction sites are unknown. When all catalyst and substrate reside in aggregates, and the only cause of increased $k_{obsd}$ (observed rate constant) is enhanced concentration of reactants in the aggregates, the following approximate expression[2] holds for $k_M$, the rate constant in the aggregates:

$$k_M = k_{obsd} V_h^2$$

where $V_h$ is volume fraction of the aggregates.

Scheme II

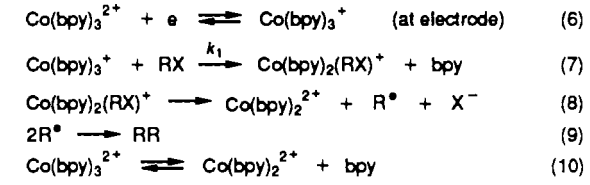


anion radical with 4-bromobiphenyl (4-BB) in 0.1 M CTAB/0.1 M tetraethylammonium bromide (TEAB). This is much larger than $k_1$ in homogeneous *N,N*-dimethylformamide (DMF) (Table I). The thick film of CTAB adsorbed on the electrode (Figure 2) at −2.2 V preconcentrates large amounts of hydrophobic reactants and causes rate enhancement.

Catalytic reductions of organohalides at potentials more positive than −2 V in aqueous CTAB showed smaller rate enhancements (Table I). These reactions occurred mainly in diffusing micelles[20] (Figure 3). Smaller apparent rates are found in this case because the two reactants are statistically distributed[2,17] among micelles, lowering the product of their concentrations in the reactive micelles containing both reactants. This reactant concentration product, to which the forward rate of eq 2 is directly proportional, can be larger when both reactants are concentrated in a thick film on the electrode.

Modest rate increases in CTAB were found for reduction of allyl chloride with tris(2,2′-bipyridyl)cobalt(II).[21a] This catalytic dimerization is shown in Scheme II. The Co(I) complex formed in eq 6 reacts with allyl chloride (RX) to give an organocobalt intermediate (eq 7). This decomposes (eq 8) to yield allyl radicals (R•), which couple to form 1,5-hexadiene (RR, eq 9). Only 73% of the catalyst is bound to CTAB micelles,[21b] lowering its local concentration in the reactive micelles and limiting rate enhancement.

Rate constants for reduction of allyl chloride mediated in aqueous SDS micelles by tris(2,2′-bipyridyl)cobalt(II) were similar to those in acetonitrile. The long-chain derivative tris(4,4′-dihexadecyl-2,2′-bipyridyl)cobalt(II) gave a 3-fold-larger rate (Table I). NMR and UV spectra showed that tris(2,2′-bipyridyl)cobalt(II) is bound to the negatively charged outer surface of SDS micelles, but to hydrophobic sites of CTAB micelles.[21b] Tris(4,4′-dihexadecyl-2,2′-bipyridyl)cobalt(II) and allyl chloride are anchored to hydrophobic regions of micelles. Comparing these observations with kinetic data (Table I) reveals that the largest rates occur when both reactants are strongly bound in hydrophobic regions of the micelles.

## Reduction of Alkyl Vicinal Dibromides in a W/O Microemulsion

Vicinal dihalides such as ethylene dibromide (EDB) are suspected carcinogens that had been used as agricultural fumigants and have turned up in water supplies in the northeastern United States. Reduction of vicinal dihalides to less toxic alkenes is catalyzed by vitamin $B_{12r}$, a Co(II) corrin complex.[22,23] The pathway is similar to Scheme I, and the rds is an inner-sphere ET between $B_{12}$Co(I) and the alkyl dibromide. We studied these reactions in a w/o microemulsion of Aerosol OT (AOT, bis(2-ethylhexyl)sulfosuccinate)/water/isooctane, in which vitamin $B_{12}$ resides entirely in water pools. The substrates EDB, 1,2-dibromobutane (DBB), and *trans*-1,2-dibromocyclohexane (*t*-DBC) are mainly in the isooctane.[22] This is an example in which reactants are spatially separated in the two phases of the microemulsion.

Microelectrode voltammetry was used to find $k_1$ in the highly resistive w/o microemulsions.[22,24a] Apparent $k_1$'s were 3 orders of magnitude smaller in the w/o microemulsion than in acetonitrile/water (Table I). The reaction occurs at diffusing water microdroplets, rather than on the electrode surface. Attenuation of rates occurs because the alkyl dibromides are in isooctane, while the $B_{12}$ mediator is in the water pools. Relative $k_1$'s for DBB:EDB:*t*-DBC were 1:2:4 in water/MeCN and 1:4:20 in the microemulsion.[22] Thus, the microemulsion altered the selectivity of the reaction. While relative reactivity of EDB may increase in the microemulsion because it partitions best into water, *t*-DBC is very poorly partitioned into water[24b] but has the largest relative rate. Possible explanations include (i) an increase in *t*-DBC concentration at the microdroplet surface by interaction with AOT hydrocarbon tails and (ii) significant reaction in isooctane. Both factors may favor increased selectivity for *t*-DBC in the microemulsion since it is the most reactive of the substrates in MeCN/water and, as a cyclic hydrocarbon, should interact strongly with AOT tails.[15a]

## Bulk Dehalogenation of PCBs

An ongoing application in our work has been bulk dehalogenation of PCBs and their commercial mixtures (Aroclors). Surfactant media facilitate stepwise catalytic dechlorination (Scheme I) of these nonpolar aryl halides in the presence of water and particulates which are found with PCBs in the environment. Toxic, expensive organic solvents are avoided. We typically use carbon felt or mercury cathodes of geometric areas 10–35 $cm^2$. Catalysts 9-PA, perylene, 1,2-dicyanobenzene, $Co(bpy)_3^+$, and zinc phthalocyanine (ZnPc) were evaluated for the bulk reactions.[17,18,20] ZnPc was the most active. These reactions are very selective for stepwise dehalogenation. No products other than biphenyl and lower PCB congeners have been detected by HPLC.

In kinetic studies of halobiphenyl reductions, we found that cationic surfactants stabilized active forms of catalysts against side reactions with water. However, catalyst may still be destroyed. For example, decomposition of 9-PA was slower in aqueous CTAB than in DMF.[17] Nevertheless, in electrolyses of 4-BB on Hg involving about 4 turnovers, 20% of the 9-PA was de-

(20) Rusling, J. F.; Shi, C.-N.; Couture, E. C.; Kumosinski, T. F. Electrocatalysis in Membrane Mimetic Media In *Redox Chemistry and Interfacial Behavior of Biological Molecules*; Dryhurst G., Niki, K., Eds.; Plenum: New York, 1988; pp 565–581.

(21) (a) Kamau, G. N.; Rusling, J. F. *J. Electroanal. Chem.* **1988**, *240*, 217–226. (b) Kamau, G. N.; Leipert, T.; Shukla, S. S.; Rusling, J. F. *J. Electroanal. Chem.* **1987**, *233*, 173–187.

(22) Owlia, A.; Wang, Z.; Rusling, J. F. *J. Am. Chem. Soc.* **1989**, *111*, 5901–5908.

(23) (a) Connors, T. F.; Arena, J. V.; Rusling, J. F. *J. Phys. Chem.* **1988**, *92*, 2810–2816. (b) Rusling, J. F.; Connors, T. F.; Owlia, A. *Anal. Chem.* **1987**, *59*, 2123–2127.

(24) (a) Miaw, C. L.; Owlia, A.; Rusling, J. F. *Anal. Chem.* **1990**, *62*, 268–273. (b) Partition coefficients for isooctane/water: EDB 143, DBB 5100, *t*-DBC 50 000.[22]

(25) (a) Iwunze, M. O.; Sucheta, A.; Rusling, J. F. *Anal. Chem.* **1990**, *62*, 644–649. (b) Evans, D. H. *J. Electroanal. Chem.* **1989**, *258*, 451–456 and references therein. (c) Mackay, R. A.; Myers, S. A.; Bodalbhai, L.; Brajter-Toth, A. *Anal. Chem.* **1990**, *62*, 1084–1090.

stroyed. A likely decomposition path for 9-PA is protonation by water of the anion radical formed, followed by rapid reduction of the resulting free radical at the electrode.[26] On the other hand, very little destruction of ZnPc was found in electrolyses of PCBs involving 10–20 turnovers.[27a]

Our most successful dehalogenations employed ZnPc in aqueous dispersions of didodecyldimethylammonium bromide (DDAB), present in water as lamellar aggregates (cf. Figure 1).[18] Carbon felt cathodes were used at −2.3 V vs SCE with ultrasound to enhance mass transport. Aroclor 1016 (42% Cl, 12 mg in 25 mL of DDAB dispersion) was completely dehalogenated in 25 h. Less than 10% dehalogenation was found for analogous reaction conditions in aqueous CTAB.

DDAB facilitates strong coadsorption of ZnPc and PCBs onto the negative cathode. In DDAB dispersions, the reaction takes place predominately in a DDAB film on the electrode surface. These findings illustrate once again that reaction rates are enhanced by coadsorbing reactants with surfactant on electrodes. The negative cathode provides a favorable surface for adsorption of dispersed cationic DDAB aggregates. Coadsorption of nonpolar reactants with DDAB on the electrode improves rates of dehalogenation compared to micellar CTAB,[18] which is less completely adsorbed on the electrode.

## Electrochemistry in Bicontinuous Microemulsions

Microemulsions with a high fraction of oil can solubilize larger amounts of nonpolar reactants than most aqueous micelles and dispersions. Conductive microemulsions should be useful for preparative electrochemical catalysis using large electrodes. A fascinating series of microemulsions made from DDAB, oil, and water are bicontinuous and conductive over significant regions of their phase diagrams.[25a] The surfactant DDAB resides at extended, dynamic, interfacial networks separating the water and oil. The amount of water needed for a bicontinuous microemulsion decreases as the chain length of the oil decreases. Conducting DDAB microemulsions can be prepared with as little as 2% water if cyclohexane is the oil.

Cyclic voltammograms for ions in the water phase and nonpolar molecules in the oil phase of bicontinuous microemulsions of dodecane/water/DDAB were in good agreement with theory for electrochemistry in homogeneous media.[25a] This is because both water and oil are continuous. In contrast, in micelles and w/o and o/w microemulsions, coupled diffusion and dynamic binding equilibria of reactant with aggregates must be considered to interpret voltammetric results.[5,20–22,25] Diffusion of solutes did not reflect the high bulk viscosities (19–38 cP) of the DDAB microemulsions. Hydrophilic ions diffused with rates characteristic of the water phase; nonpolar molecules diffused at rates similar to the rates of self-diffusion of oil in the oil phase.[25a]

## Surfactant Structures for Catalytic Electrodes

As illustrated above, our aim of enhancing second-order catalytic reaction rates was best achieved by surfactant microstructures that preconcentrate both reactants. Unfortunately, very negative potentials are needed for useful coatings to adsorb spontaneously on electrodes in cationic surfactant solutions. Under certain conditions, alcohols induce coadsorption of catalysts with CTAB on metal electrodes.[27b] However, this requires matching a potential for reorganization of a CTAB/alcohol film with the $E°$ of the catalyst. We sought more general surfactant coatings that could be used at any potential with a wide variety of mediators.

Amphiphilic mediators have been coated previously on electrodes by transfer of LB films,[7b,e,f,j] by self-assembly from solution with long-chain alkanethiols[6h,i] or by adsorption onto porous octadecylsilyl aluminum oxide films on electrodes.[28] Featuring mainly monolayers or bilayers of surfactant, these coatings were not intended for binding substrates, nor does it seem that substrate preconcentration would be significant for such films.

We wanted coatings that are easy to make, provide stable microenvironments for turnover of catalysts, are usable over a wide range of potentials, and allow reversible binding of substrate and products. Thus, we have aimed at preparing stable *multilayer* coatings of surfactants capable of binding large amounts of reactants at electrodes by coulombic and hydrophobic interactions. Although LB films are excellent for fundamental work, transfer of multiple layers to an electrode is tedious. We felt that suitable systems to achieve our goals might be based on clay[29] or octadecylsilyl[30] (ODS) coatings to adsorb surfactants, or *insoluble* surfactant multilayers cast on electrodes.[31] Examples of these systems are discussed below.

**Clay Coatings with Adsorbed CTAB.** Natural clays are layered aluminosilicate cation exchangers. They adsorb cationic surfactants, inducing coadsorption of nonpolar reactants.[32] We made clay-modified electrodes (CMEs) by depositing colloidal sodium bentonite clay (ca. 500 nm thick) on pyrolytic graphite (PG). Reduction of organohalides in aqueous CTAB was mediated in the CMEs by tris(2,2′-bipyridyl)cobalt(II). This dication binds to clay in the absence or presence of CTAB.[33] It gives separate CV reduction peaks for Co(II) (−1.2 V) and Co(I) (−1.5 V).

Catalytic efficiency for reduction of allyl chloride in aqueous CTAB with tris(2,2′-bipyridyl)cobalt(II) was up to 2-fold larger on CMEs than on bare PG. Furthermore, decomposition of the organocobalt intermediate (Scheme II) was catalyzed by the clay surface.[33b] Reductive debromination of 4,4′-dibromobiphenyl (4,4′-DBB) was effected by two-electron reduction of tris(2,2′-bipyridyl)cobalt(I).[33] Catalytic efficiency for

(26) Dietz, R. In *Organic Electrochemistry*, 2nd ed.; Baizer, M. M., Lund, H., Eds.; Marcel Dekker: New York, 1983; pp 237–258.
(27) (a) Couture, E. C.; Rusling, J. F., unpublished results. (b) Rusling, J. F.; Couture, E. C. *Langmuir* **1990**, *6*, 425–432.
(28) (a) Miller, C. J.; Majda, M. *Anal. Chem.* **1988**, *60*, 1168–1176. (b) Bourdillon, C.; Majda, M. *J. Am. Chem. Soc.* **1990**, *112*, 1795–1799.
(29) (a) Rudzinski, W. E.; Bard, A. J. *J. Electroanal. Chem.* **1986**, *199*, 323–340. (b) King, R. D.; Nocera, D. G.; Pinnavaia, T. J. *J. Electroanal. Chem.* **1987**, *236*, 43–53.
(30) (a) Rusling, J. F.; Zhang, H. *Anal. Chim. Acta* **1990**, *235*, 307–315. (b) Electrons probably pass through microdefects in ODS film on these electrodes; see: Sabatani, E.; Rubinstein, I. *J. Phys. Chem.* **1987**, *91*, 6663–6669.
(31) (a) Tanaka, K.; Tamamushi, R. *J. Electroanal. Chem.* **1987**, *236*, 305–307. (b) Garcia, O. J.; Quintela, P. A.; Kaifer, A. E. *Anal. Chem.* **1989**, *61*, 979–981. (c) Chastel, O.; Kauffmann, J.-M.; Patriarche, G. J.; Christian, G. D. *Anal. Chem.* **1989**, *61*, 170–173.
(32) (a) Thomas, J. K. *J. Phys. Chem.* **1987**, *91*, 267–276. (b) Nakamura, T.; Thomas, J. K. *Langmuir* **1987**, *3*, 234–239.
(33) (a) Rusling, J. F.; Shi, C.; Suib, S. L. *J. Electroanal. Chem.* **1988**, *245*, 331–337. (b) Shi, C.; Rusling, J. F.; Wang, Z.; Willis, W. S.; Winiecki, A. M.; Suib, S. L. *Langmuir* **1989**, *5*, 650–660.

this reaction in CTAB micelles was also enhanced up to 2-fold on CMEs compared to bare PG. A remarkable feature during reduction of 4,4′-DBB on CMEs in CTAB was effective protection of tris(2,2′-bipyridyl)-cobalt(I), as opposed to complete decomposition of this mediator in acetonitrile in an hour (4 turnovers).[33a]

Electroanalytical, X-ray diffraction, and surface spectroscopy studies showed that CMEs indeed coadsorbed CTAB, catalyst, and organohalides from CTAB solutions.[33b] UV spectra of clay films treated with CTAB and either tris(bipyridyl)cobalt(II) or 4,4′-DBB demonstrated adsorption of the latter two species on the clay. Five-fold-smaller absorbance for tris(bipyridyl)cobalt(II) when adsorbed from aqueous CTAB instead of water suggested that CTAB and catalyst compete for some similar binding sites. Energy-dispersive X-ray analyses (EDX) of CMEs supported this conclusion.

X-ray powder diffraction of clay films treated with solutions of catalysts and CTAB showed expansion of clay interlayers by 2–5 Å. Clay films equilibrated simultaneously with CTAB and either $Ru(NH_3)_6^{3+}$ or $Co(bpy)_3^{2+}$ gave two distinct low-angle diffraction peaks. Results again suggest independent binding sites in clay films for the metal complexes and CTAB. $Ru(NH_3)_6^{3+}$ and $Co(bpy)_3^{2+}$ are thought to intercalate between clay layers as well as bind to outer surfaces.[29] However, the 2 (±0.1) Å increase in interlayer spacing of clay films treated with CTAB is too small to accommodate fully intercalated CTAB, with a head-group diameter of 4.6 Å.[15a]

X-ray photoelectron spectroscopy (XPS) is sensitive to the top 20–50 Å of a sample's surface. Co and Ru were detected by XPS on CMEs treated with $Ru(NH_3)_6^{3+}$ and $Co(bpy)_3^{2+}$. Depth profiles by XPS indicated distribution of Co and Ru throughout the CMEs.[33b] The amount of Co found by XPS on the surface of CMEs treated with $Co(bpy)_3^{2+}$ and CTAB was less than on CMEs treated only with $Co(bpy)_3^{2+}$.

Static secondary ion mass spectrometry (SIMS) detects ions from *only the top 2–5* Å of the sample. A striking result from SIMS was a larger signal for cobalt on the Co/CTAB/CME surface than for a CME treated only with $Co(bpy)_3^{2+}$.[33b] Combined with the other data, this suggests that $Co(bpy)_3^{2+}$ binds to hemimicelles[32] of CTAB on the outer surface of the clay. This is reasonable, since $Co(bpy)_3^{2+}$ binds hydrophobically to aqueous CTAB micelles.[21b] On the other hand, Ru was not detected on the surface of the CMEs treated with $Ru(NH_3)_6^{3+}$ and CTAB. Hydrophilic $Ru(NH_3)_6^{3+}$ does not bind to CTAB aggregates and is replaced by them on the surface.

Results summarized above suggest that reductions of organohalides by cobalt bipyridyl complexes occur mainly in CTAB aggregates on the outer surfaces of the CME (Figure 4). This is compatible with the view that intercalated bipyridyl complexes in CMEs are not electrochemically accessible.[29] Adsorption of CTAB provides hydrophobic reaction sites on the CME with higher concentrations of reactants than can be achieved at bare electrodes, increasing catalytic efficiency by enhancing rates of second-order rds's.

**ODS Electrodes in Micellar Solutions.** Octadecylsilyl-coated electrodes were studied in micellar solutions in the hope that they would also coadsorb

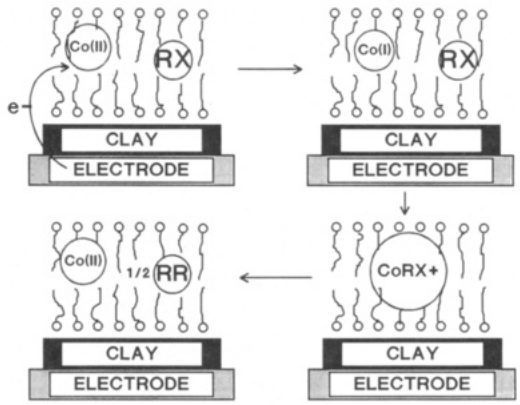


**Figure 4.** Conceptual representation of electrochemical catalytic dimerization of allyl chloride (RX) to 1,5-hexadiene (RR) with tris(2,2′-bipyridyl)cobalt(II) [Co(II)] on the outer surface of a CME in CTAB solutions. The layered nature of the clay coating is not shown.

surfactant, catalyst, and substrates. Pt and PG treated with octadecyltrichlorosilane gave stable ODS monolayers bound to the surfaces through –Si–O– bonds. CTAB and SDS layers adsorbed on ODS electrodes were fragile; XPS analyses showed that moderate washing with water removed them. High concentrations of mediators were not achieved on surfaces of ODS electrodes in micellar solutions because of partition of solutes into the micelles.[30a]

Voltammetry in micellar solutions did reveal moderate control over heterogeneous ET rates at ODS electrodes.[30] For surfactant and electroactive ions of the same charge sign, ET was partly inhibited. Ferrocene and ions of charge opposite to the surfactant showed faster ET.

**Coatings of Insoluble Surfactants.** Aiming at making multilayers with properties similar to those of adsorbed cationic surfactants at very negative potentials, we evaluated cast multilayer coatings of insoluble surfactants. DDAB and DODAB (dioctadecyldimethylammonium bromide) were chosen for these studies because they can be cast as multibilayer films,[34] and they are insoluble in water.

DDAB and DODAB films ca. 5000–8000 layers thick were cast from chloroform onto PG electrodes. Large amounts of ferrocyanide(4–) and copperphthalocyanine tetrasulfonate ($CuPcTS^{4-}$) ions were incorporated from solution into these films in their fluid liquid crystal states. The films were permeable to hydrophobic ions, blocked ET with hydrophilic cations in solution, and were stable for a week.[35] Electrochemistry was turned on in the liquid crystal phase and turned off when the film was brought to the solid-like gel state by lowering temperature. These easily prepared films seem quite promising for electrochemical catalysis.

## Outlook for the Future

Travels along the path toward general control of electrochemical catalysis with surfactants reveal a rich, exciting area for new developments in electrosynthesis and analysis. Research discussed in this Account underscores the ability of surfactants to modify and control properties of electrode surfaces, as found earlier in suppressing convection on Hg electrodes[1] and electro-

(34) Nakashima, N.; Ando, R.; Kunitake, T. *Chem. Lett.* **1983**, 1577–1580.
(35) Rusling, J. F.; Zhang, H. *Langmuir*, in press.

chemical dimerization of acrylonitrile to adiponitrile using surface-active ammonium salts.[36] Fluid surfactant coatings designed with specific properties should be a promising route to progress in this area. Appropriate coatings could in the future enhance rates and control selectivity on demand. Present work is directed toward surfactant films that incorporate and protect mediators and, at the same time, preconcentrate substrates.

Electrosynthesis requires feeding reactants to electrodes and removing products. Conductive microemulsions dissolve significant amounts of polar and nonpolar solutes and can bring together reactants of unlike solubilities. They may prove especially suitable for synthetic electrochemical catalysis. Even when the reaction occurs in surfactant aggregates in solution (cf. Figure 3), respectable rate enhancements are possible from local concentration increases. Selectivity may be influenced by reactant binding properties.[22]

Components of microemulsions may destabilize surfactant coatings on electrodes. A challenge for the future will be to design coatings to be compatible with microemulsions yet perform with high catalytic efficiency.

(36) Adiponitrile is the precursor to hexamethylenediamine in the manufacture of Nylon 66. Acrylonitrile is electrochemically dimerized to adiponitrile in aqueous solutions of tetraethylammonium (TEA) salts in a very successful industrial process[14b] discovered in 1963 at Monsanto by M. Baizer. $TEA^+$ forms an adsorbed hydrophobic layer at Hg or Pb cathodes, facilitating dimerization. In solutions of alkali salts, propionitrile, but no adiponitrile, is formed by reduction of acrylonitrile.

*I am deeply indebted to students and co-workers named in references to joint publications whose dedicated efforts were essential to the work. I also thank A. Abbott for helpful suggestions on organizing this Account. I am grateful for financial support of various aspects of our research by U.S. PHS Grant ES03154 awarded by the National Institute of Environmental Health Sciences; from the donors of the Petroleum Research Fund, administered by the American Chemical Society; and from the Research Foundation and the Environmental Research Institute, University of Connecticut.*

# Structural Characterization of Natural Nucleosides by Mass Spectrometry

JAMES A. MCCLOSKEY

*Departments of Medicinal Chemistry and Biochemistry, University of Utah, Salt Lake City, Utah 84112*

*Received September 28, 1990 (Revised Manuscript Received December 6, 1990)*

## Introduction

Mass spectrometry plays a major role in the structure determination of compounds of biological importance,[1-5] due largely to its high sensitivity and the complementary nature of information it conveys with respect to other structural techniques. Applications of mass spectrometry to nucleic acid constituents[6] have long represented a notable experimental challenge, due to the high intrinsic polarity of nucleosides and nucleotides and the problems associated with their conversion into gaseous ions. Despite these difficulties, mass spectrometry has played a dominant role in the structure determination of new nucleosides from nucleic acids and other sources.[7] For example, of the 82 known nucleosides in RNA (including the four major nucleosides), nearly all of those discovered in the last 20 years have relied on mass spectrometry as a major, and sometimes the sole, method of structural characterization.[8,9] The key elements of structural studies of nucleosides mirror those in other areas in which mass spectrometry has found successful applications: (1) the development of microscale (microgram level and below) chemical derivatization procedures to increase the information content of mass spectra, or to test for selected structural features; (2) a detailed understanding of gaseous ion chemistry of model compounds; and (3) the design of experimental protocols that permit direct examination of a targeted component in biological mixtures. In the latter case, two methods for the analysis of mixtures can be used for rapid screening of crude biological isolates to gain preliminary structural information. One is directly combined liquid chromatography–mass spectrometry (LC/MS); the other is tandem mass spectrometry (MS/MS)[10] in which ions from the substance of interest are selected in one mass spectrometer and transmitted to a gas cell, where they

James A. McCloskey received a B.S. degree from Trinity University and a Ph.D. (chemistry) from MIT. Following postdoctoral work at the Institute de Chimie des Substances Naturelles (CNRS) in Paris, he spent 10 years at Baylor College of Medicine. Since 1974 he has been professor in the Departments of Medicinal Chemistry and Biochemistry at the University of Utah. His research interests include the mass spectrometry of nucleic acid constituents, the development of structural and analytical methodology based on mass spectrometry for applications in biochemistry, and studies of the structure and function of natural nucleosides, in particular those from nucleic acids.

(1) *Biochemical Applications of Mass Spectrometry*; Waller, G. R., Ed.; Wiley-Interscience: New York, 1972.
(2) *Biochemical Applications of Mass Spectrometry*, first suppl. vol.; Waller, G. R., Dermer, O. C., Eds.; Wiley-Interscience: New York, 1980.
(3) *Mass Spectrometry in Biomedical Research*; Gaskell, S. J., Ed.; Wiley: New York, 1986.
(4) *Mass Spectrometry*; Lawson, A. M., Ed.; Walter de Gruyter: New York, 1989.
(5) *Mass Spectrometry (Methods Enzymol., Vol. 193)*; McCloskey, J. A., Ed.; Academic Press: New York, 1990.
(6) Crain, P. F. *Mass Spectrom. Rev.* **1990**, *9*, 505.
(7) Schram, K. H. In *Mass Spectrometry*; Lawson, A. M., Ed.; Walter de Gruyter: New York, 1989; p 507.
(8) McCloskey, J. A.; Nishimura, S. *Acc. Chem. Res.* **1977**, *10*, 403.
(9) Crain, P. F.; Hashizume, T.; Nelson, C. C.; Pomerantz, S. C.; McCloskey, J. A. In *Biological Mass Spectrometry*; Burlingame, A. L., McCloskey, J. A., Eds.; Elsevier: Amsterdam, 1990; p 509.
(10) For reviews, see refs 6 and 11.
(11) Nelson, C. C.; McCloskey, J. A. *Adv. Mass Spectrom.* **1989**, *11B*, 1296.

0001-4842/91/0124-0081$02.50/0 © 1991 American Chemical Society